Partdrawing for MLT100N - Pagina 1

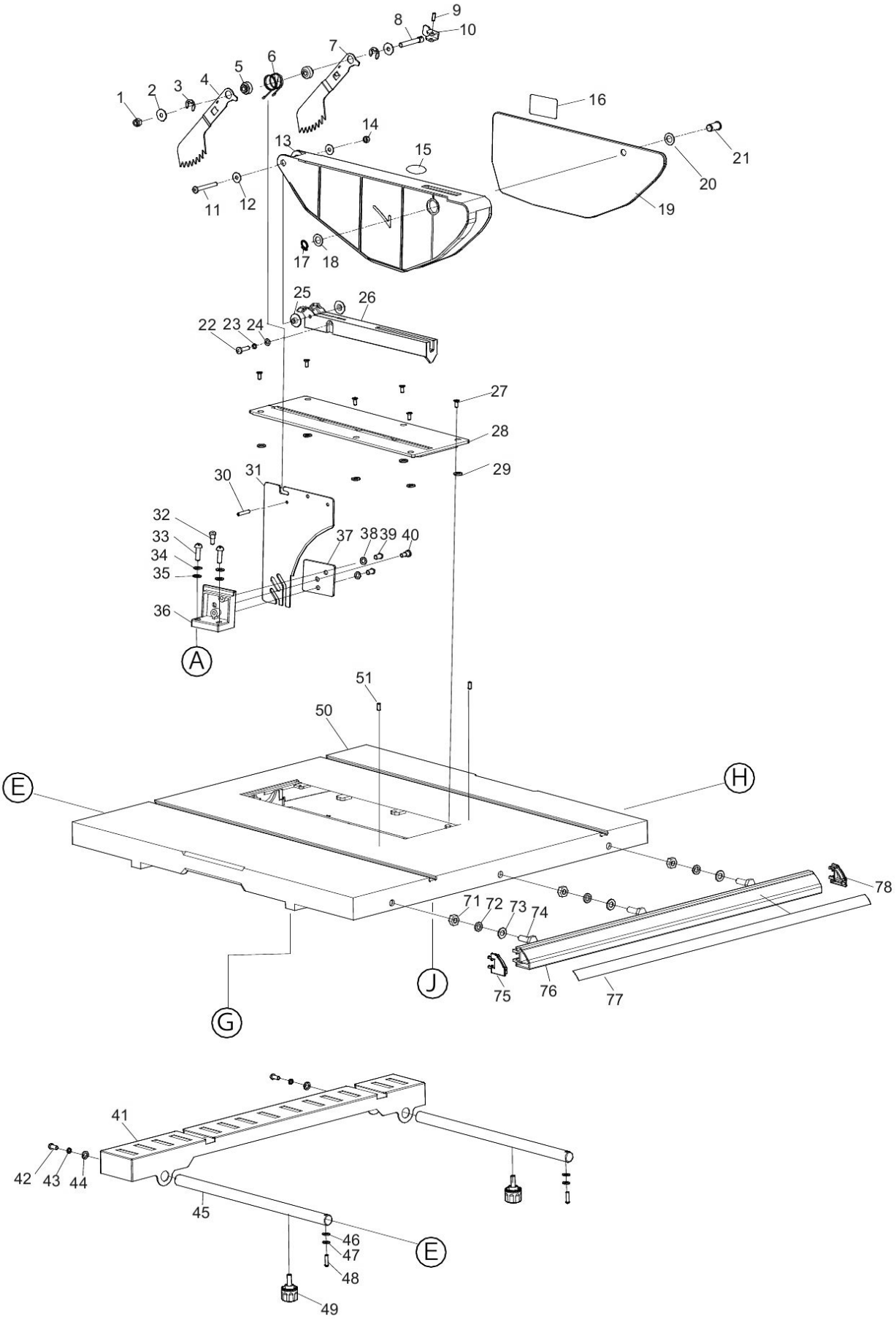

2019/10
MLT100N 1/6

Partdrawing for MLT100N - Pagina 2

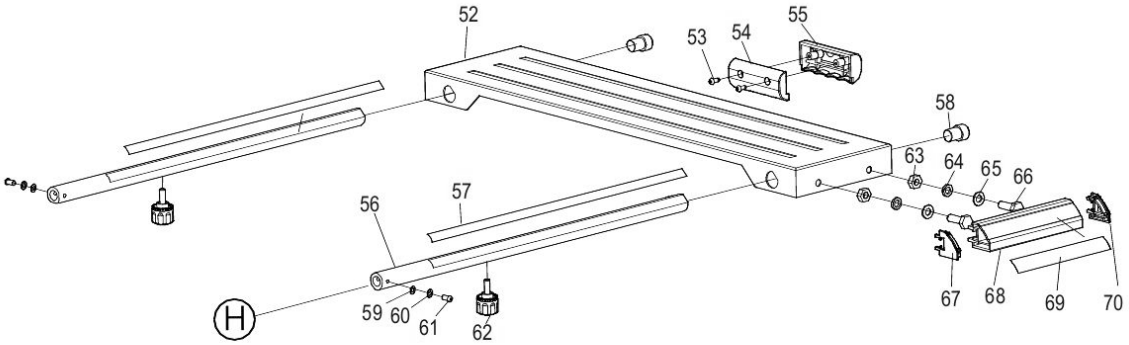

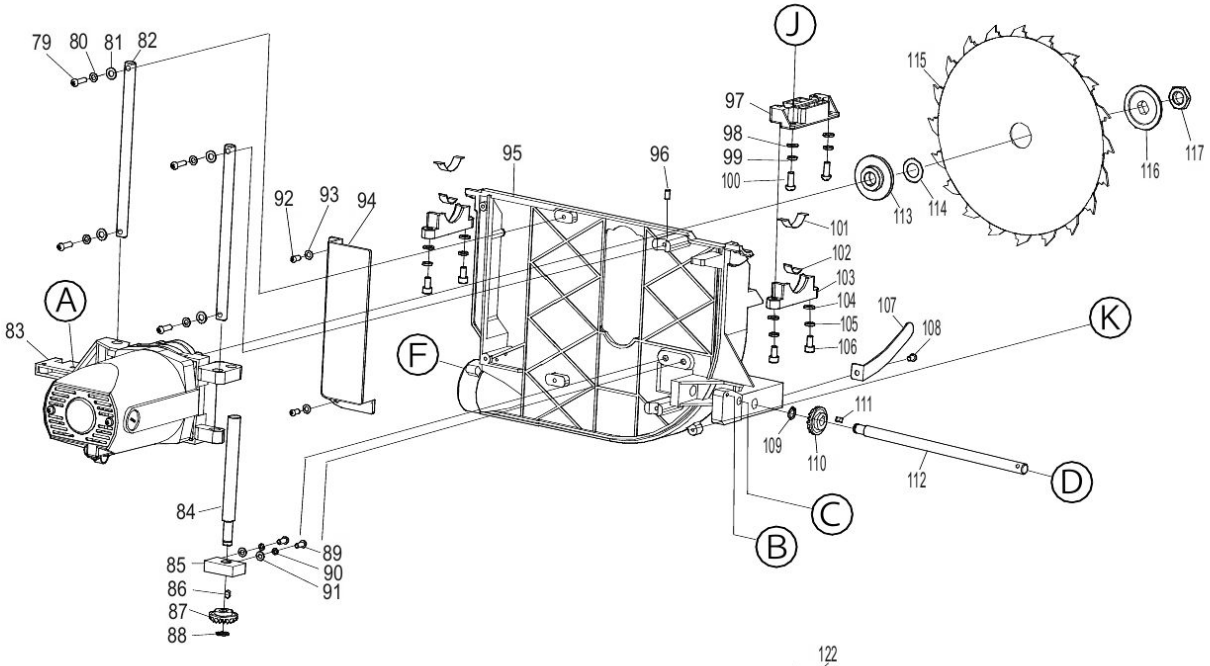

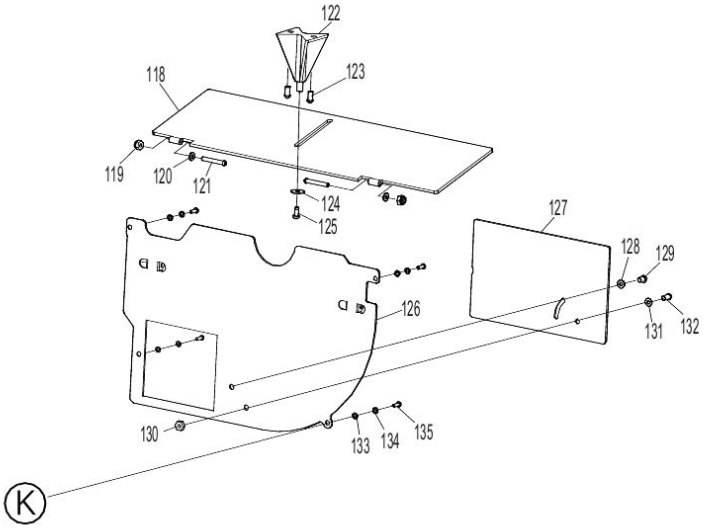

2019/10
MLT100N 2/6

Partdrawing for MLT100N - Pagina 3

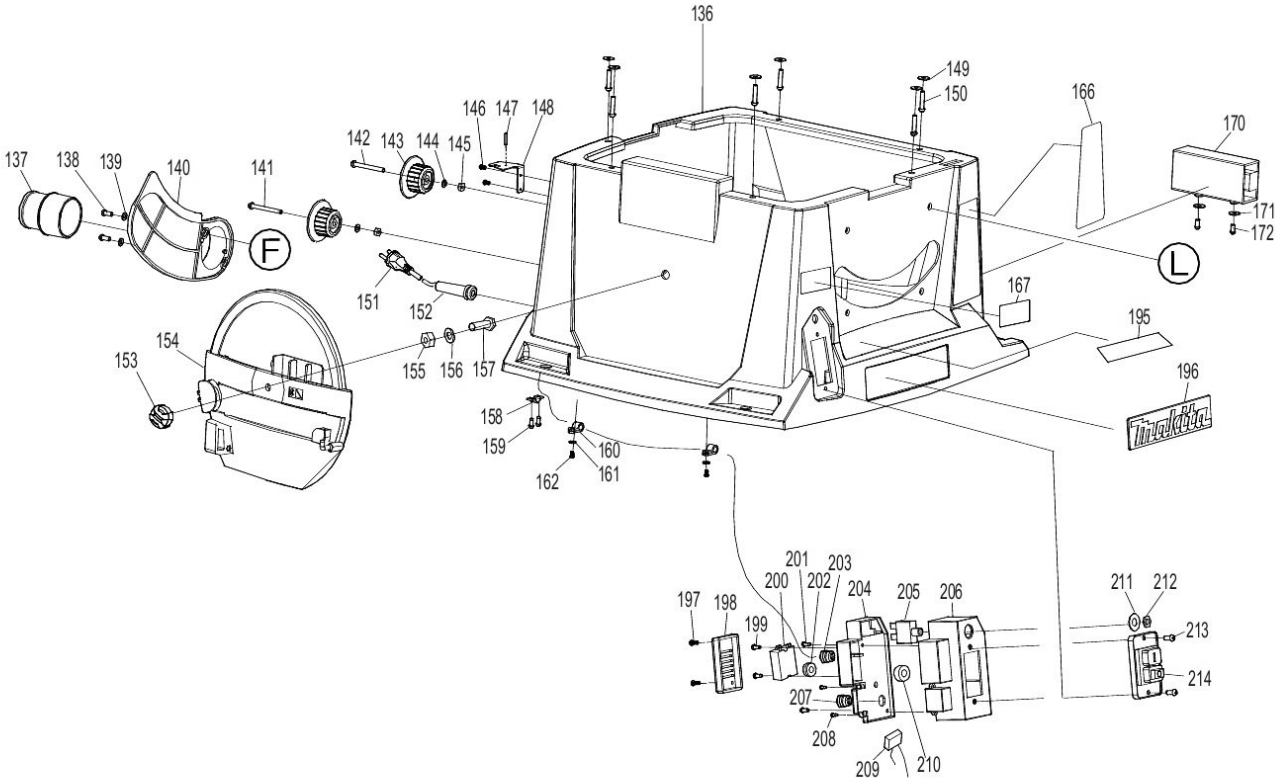

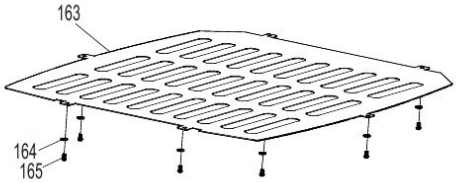

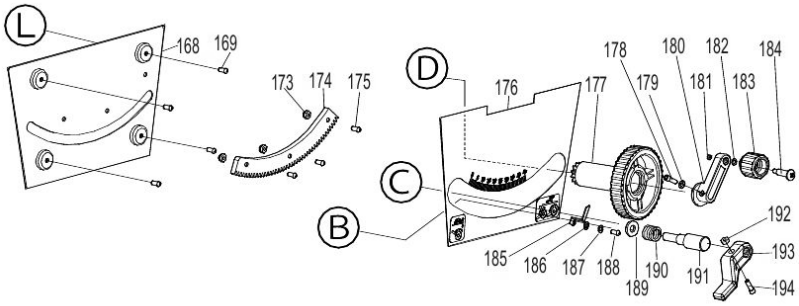

2019/10
MLT100N 3/6

Partdrawing for MLT100N - Pagina 4

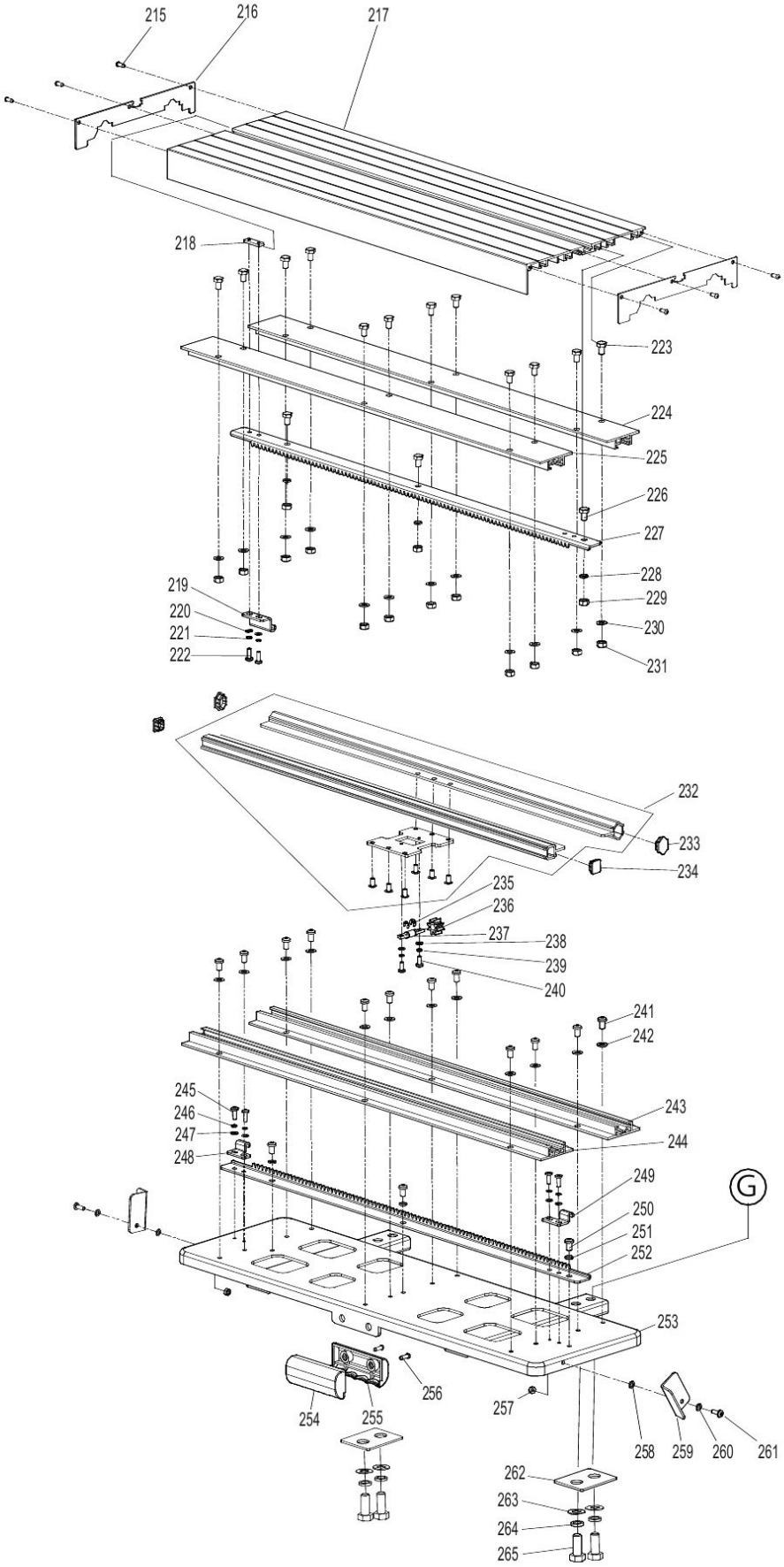

2019/10
MLT100N 4/6

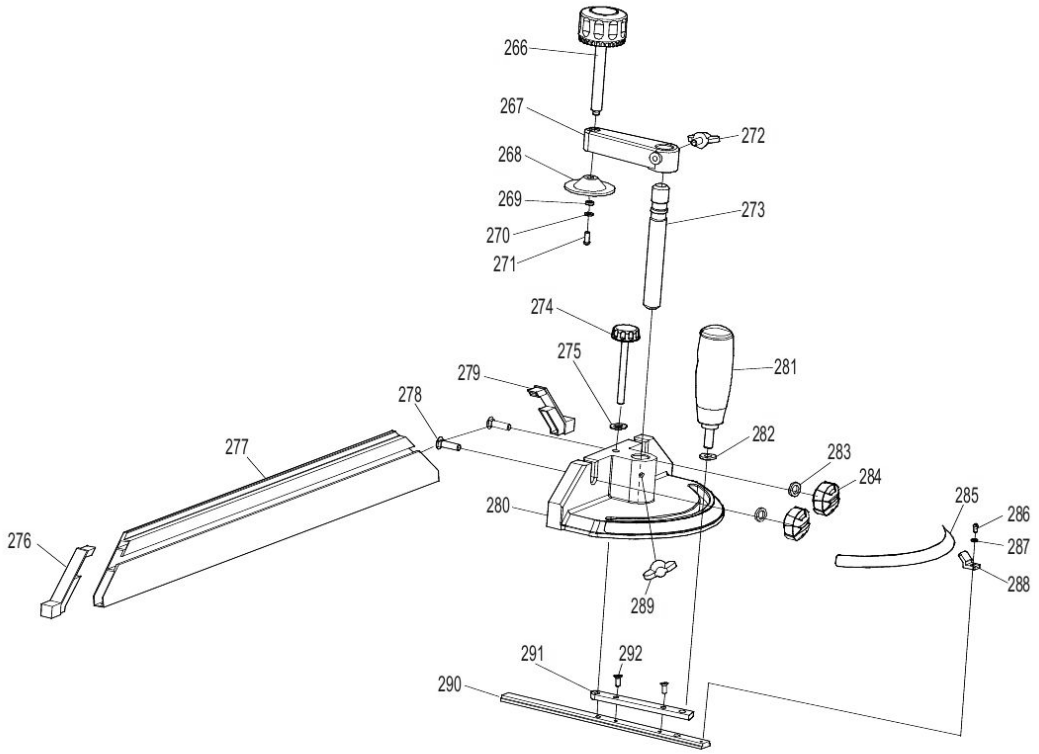

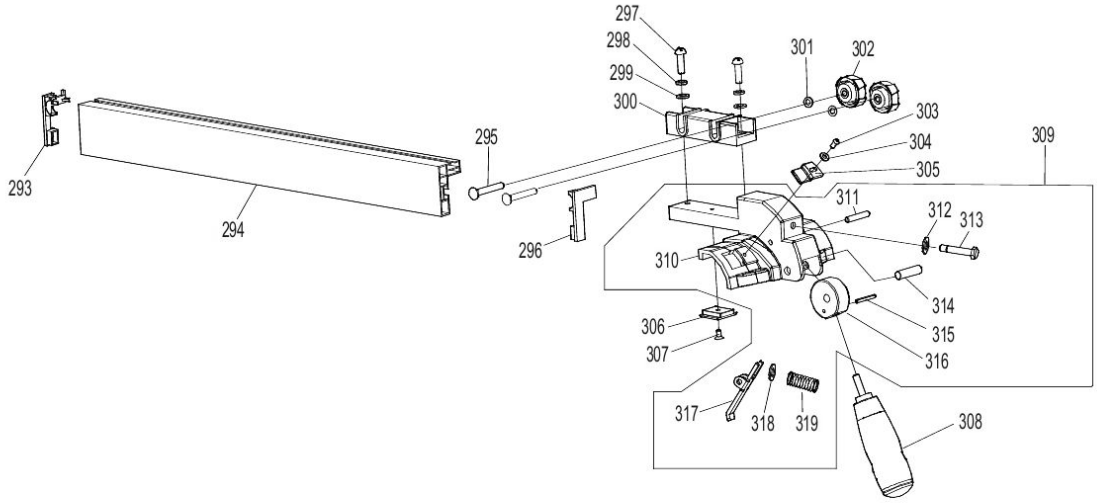

2019/10
MLT100N 5/6

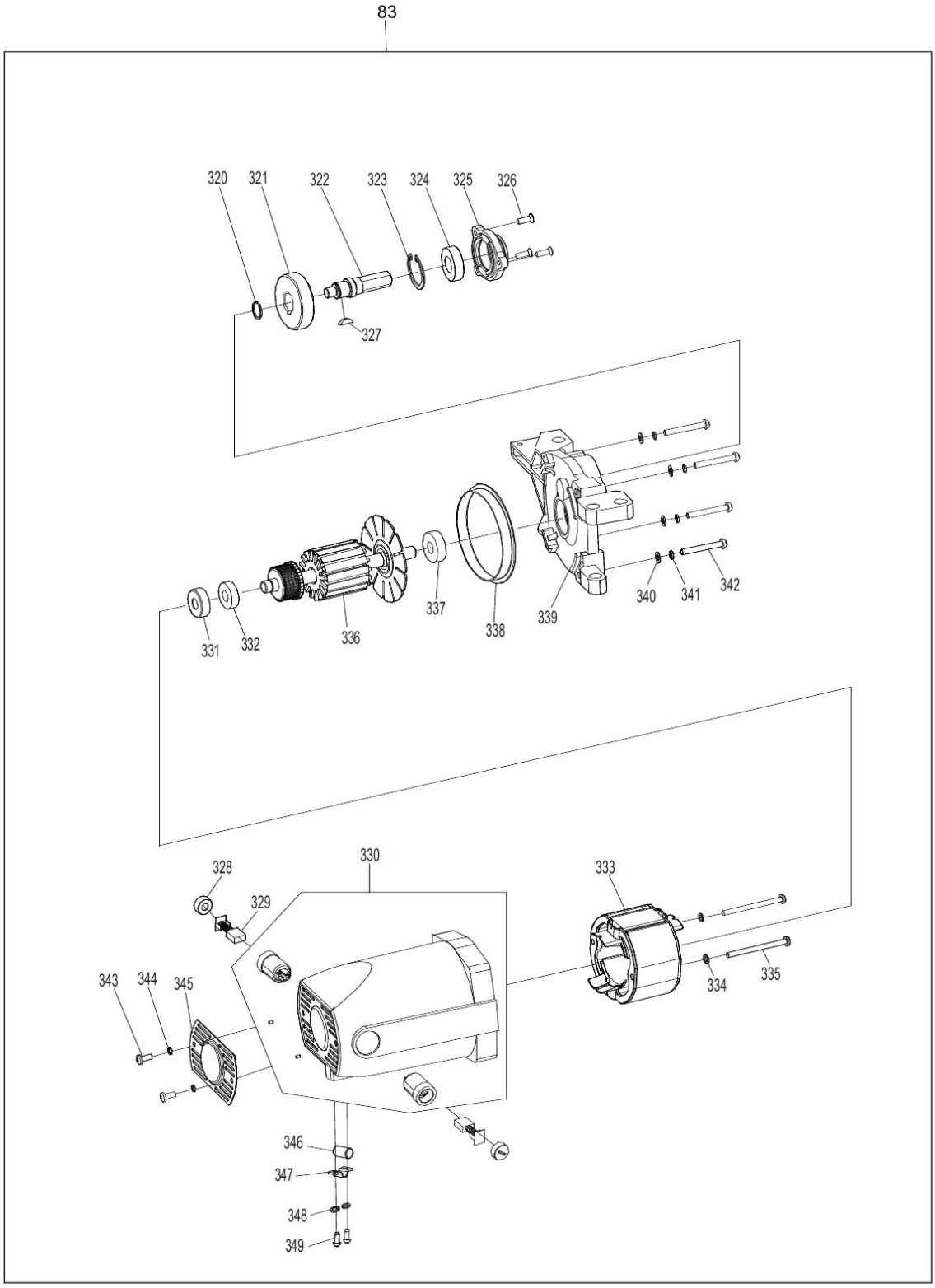

2019/10
MLT100N 6/6