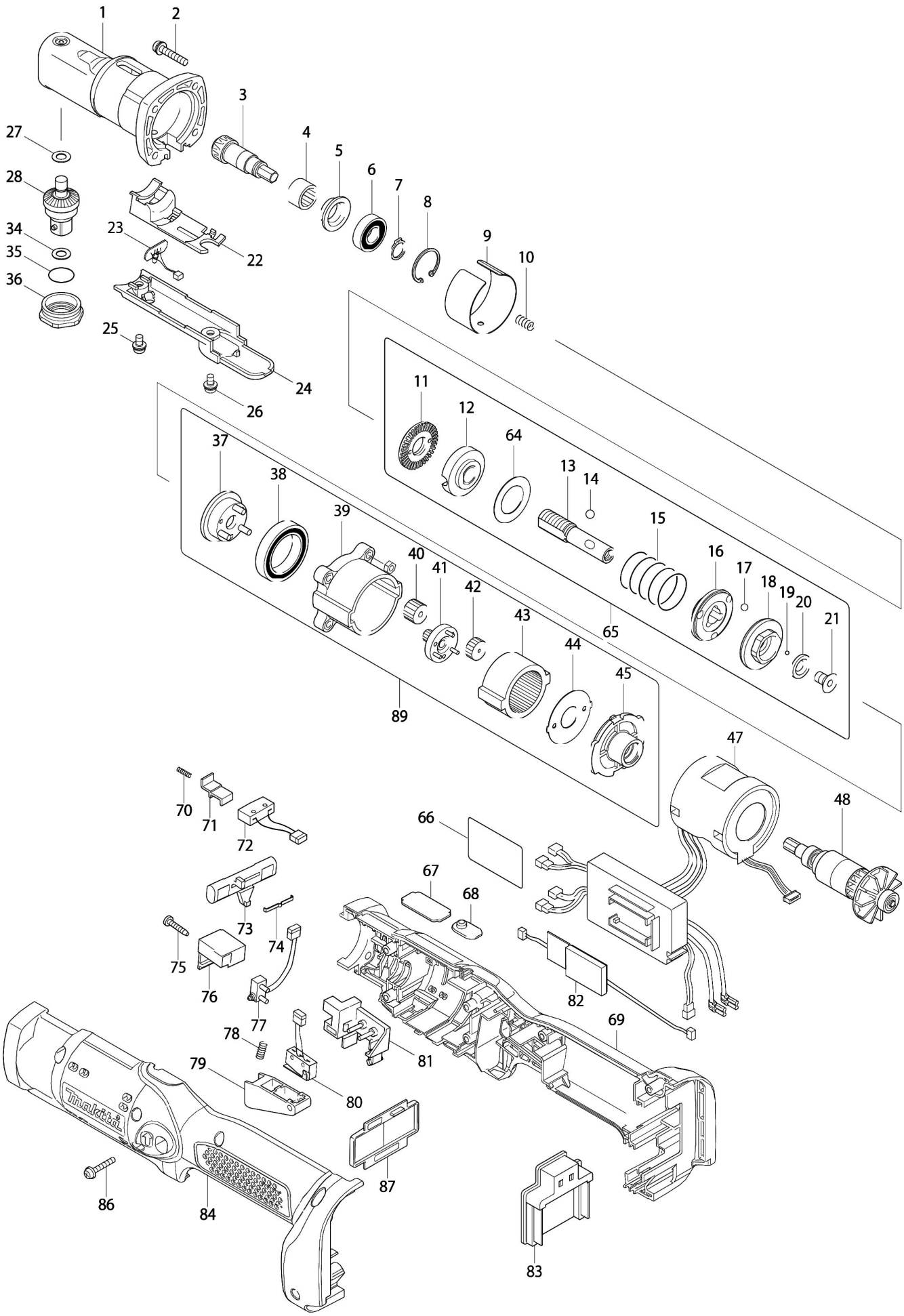Partdrawing for DFL201FZ - Haakse momentsleutel