Partdrawing for DCL501RT - Accessoires

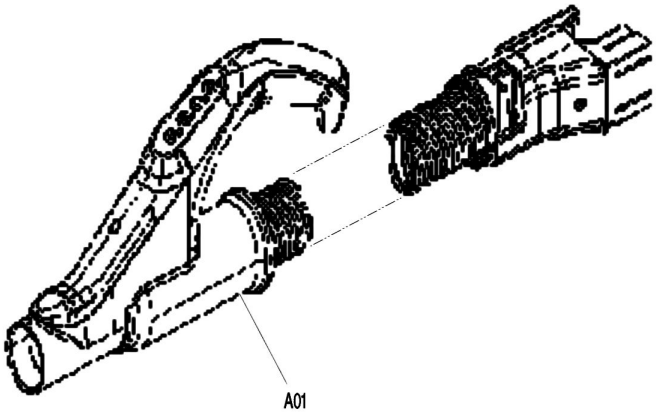

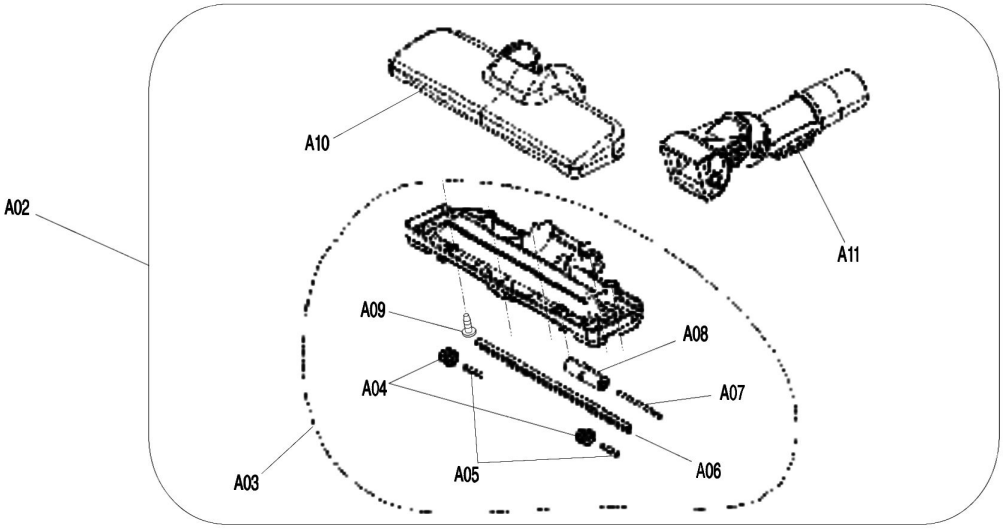

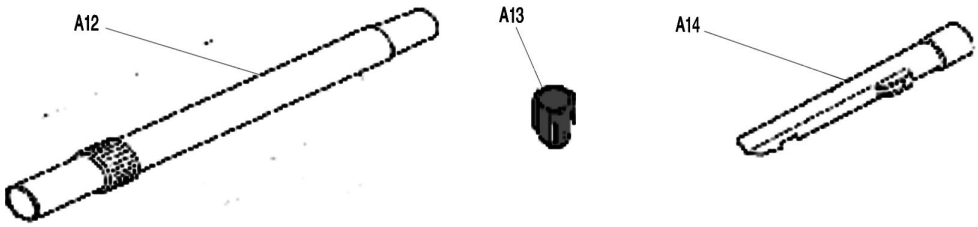

Partdrawing for DCL501RT - Filterunit

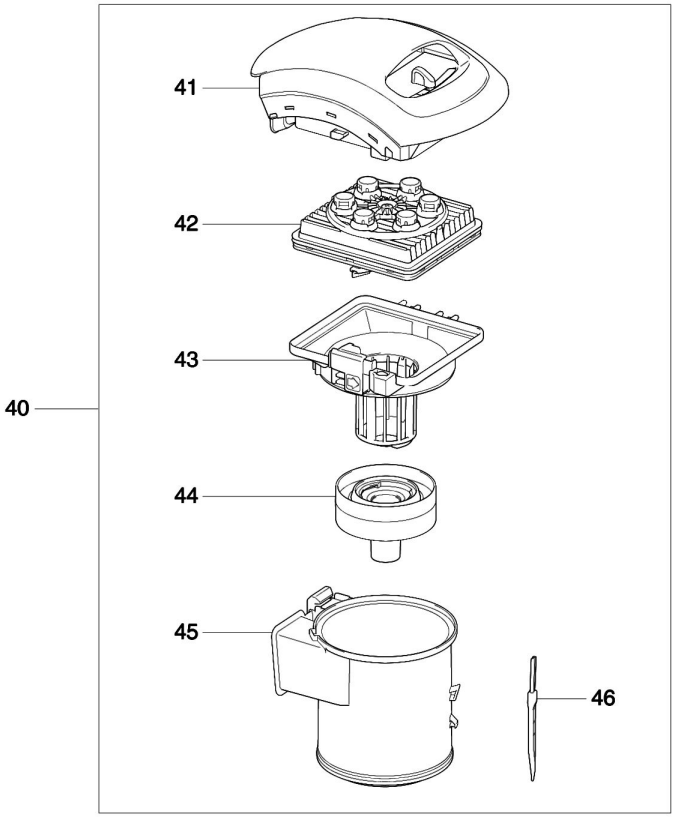
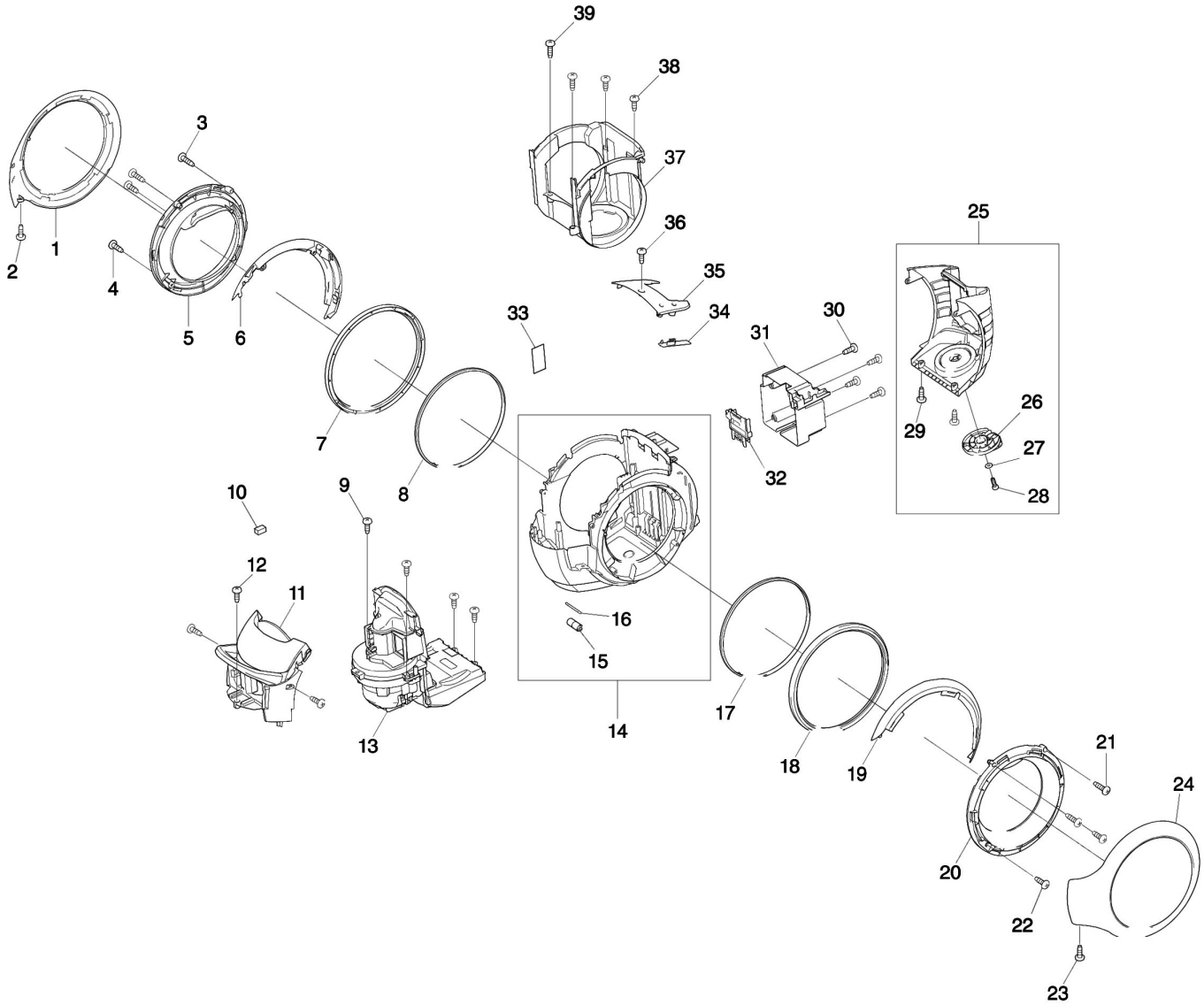
Partdrawing for DCL501RT - Motorunit