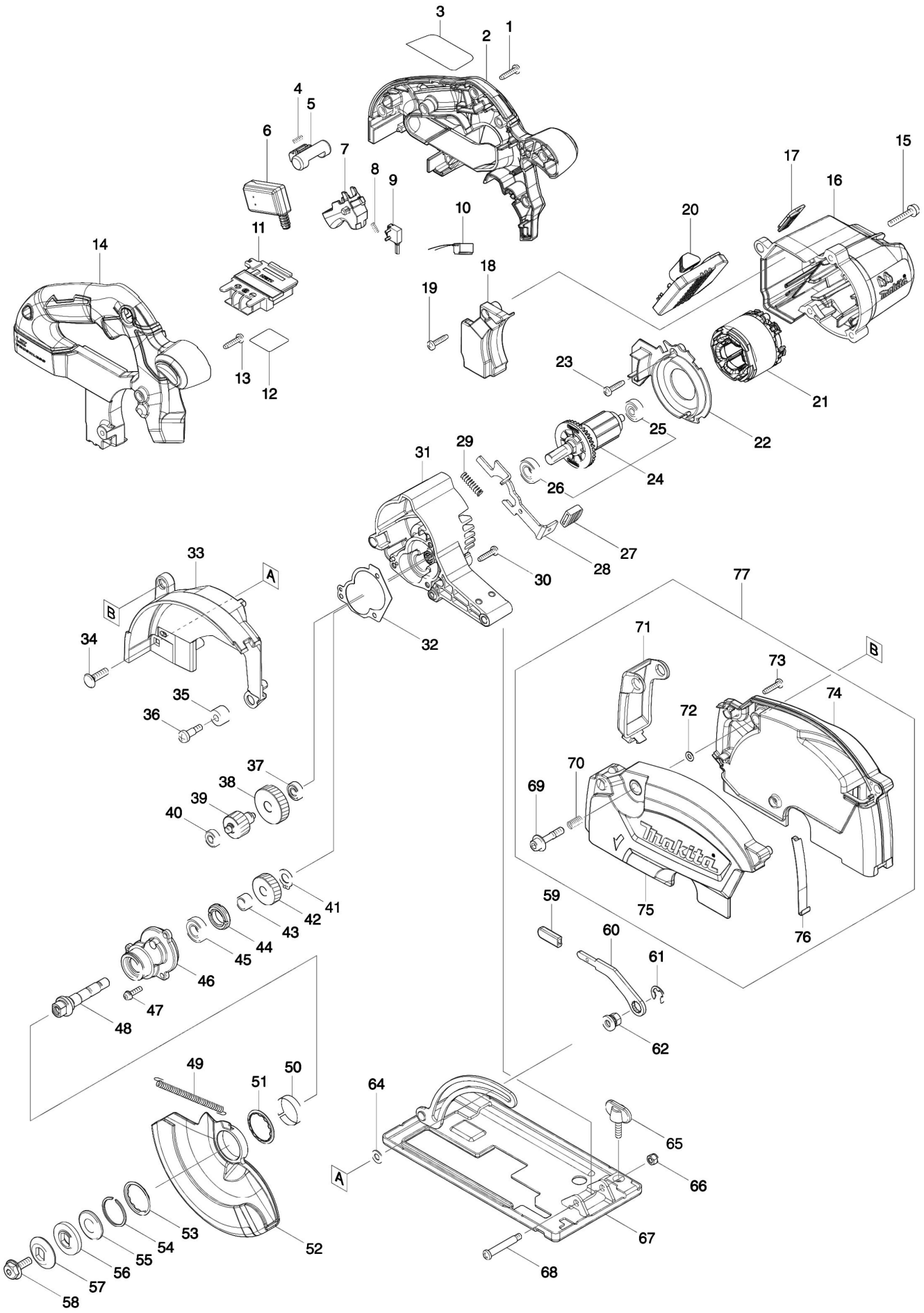Partdrawing for DCS553ZJ - Pagina 1