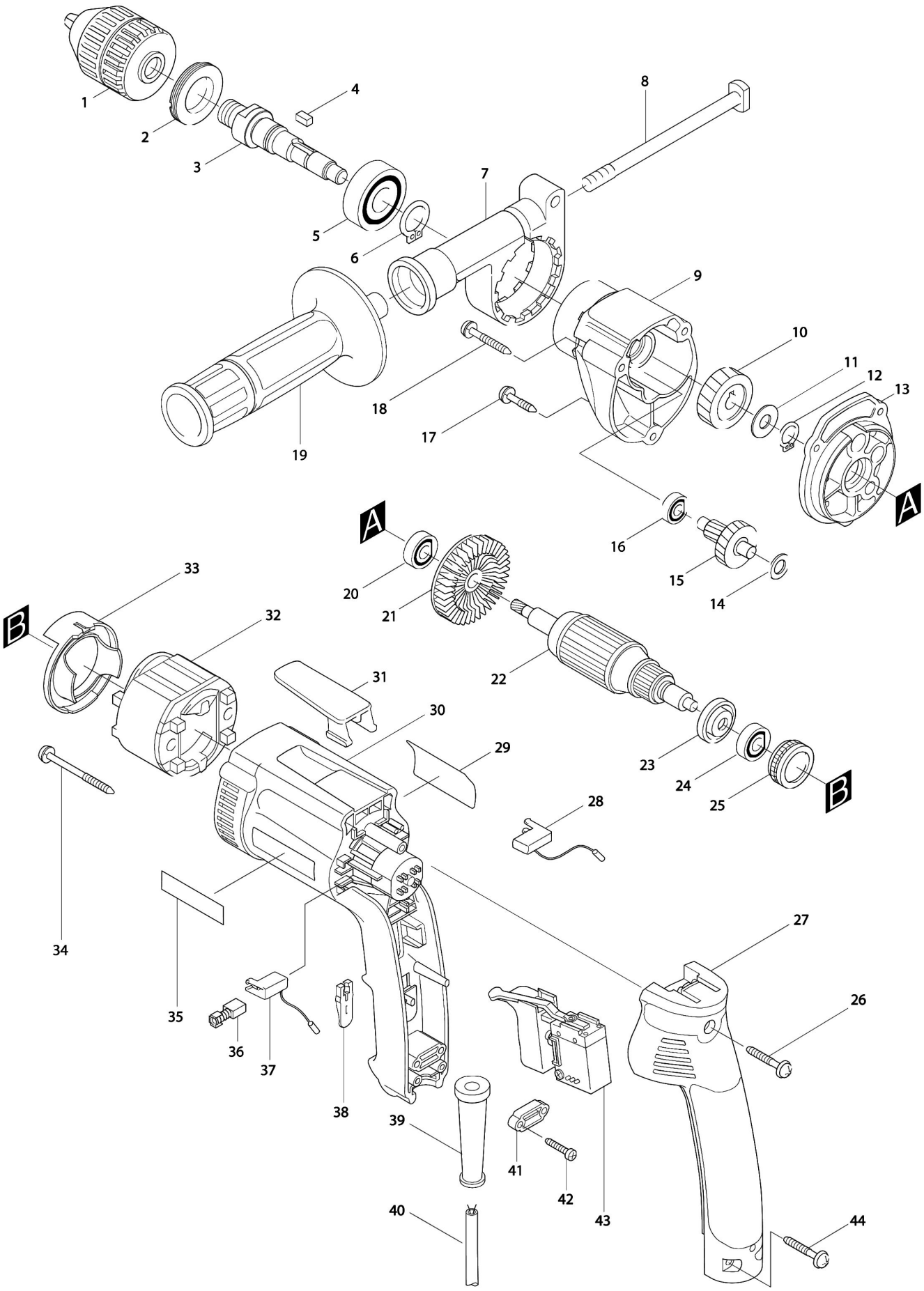Partdrawing for DP3003 - Boormachine