Partdrawing for DUC355Z - Kettingzaag

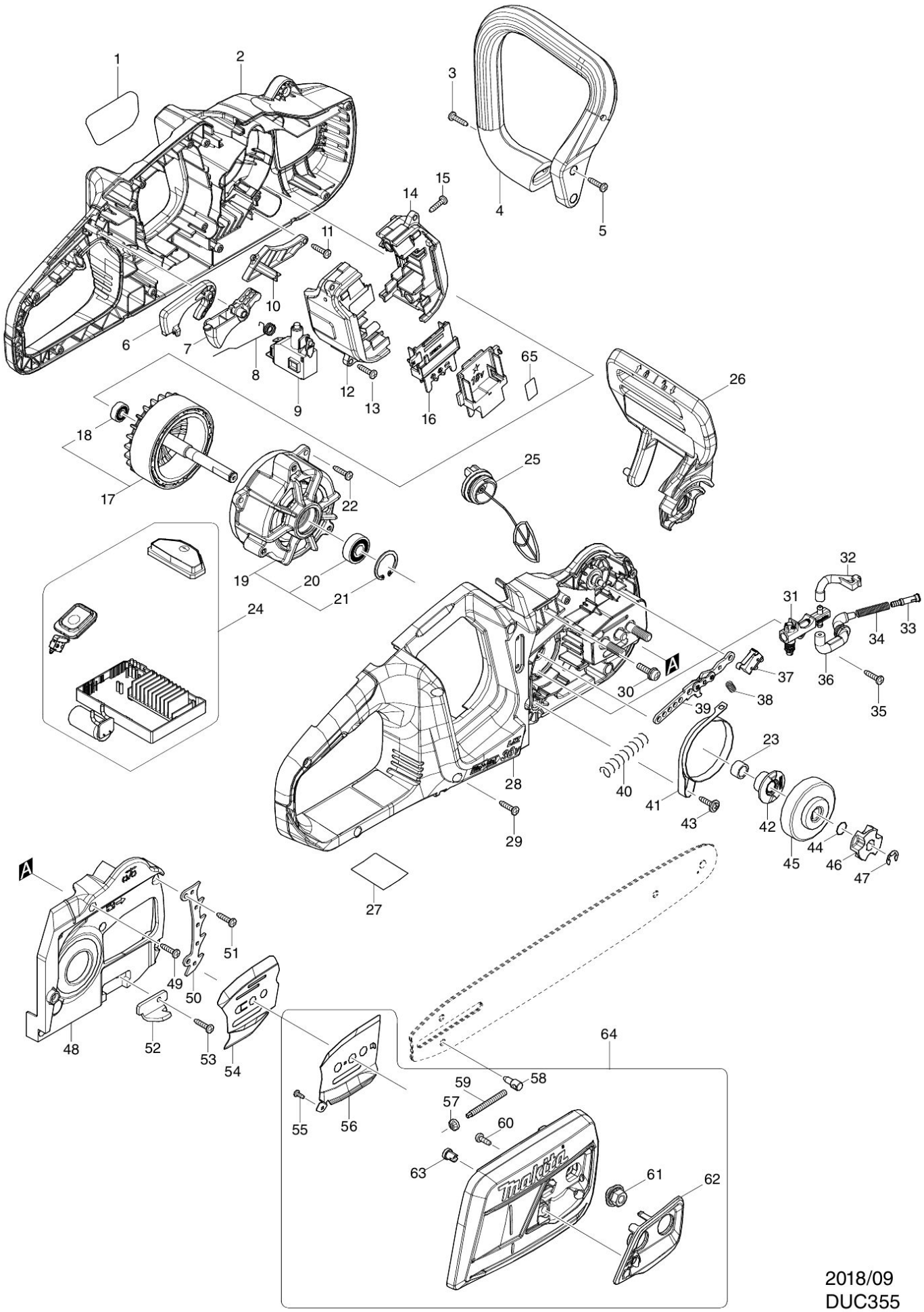

2018/09
DUC355