Partdrawing for DUH751Z - Handgreep & Motor

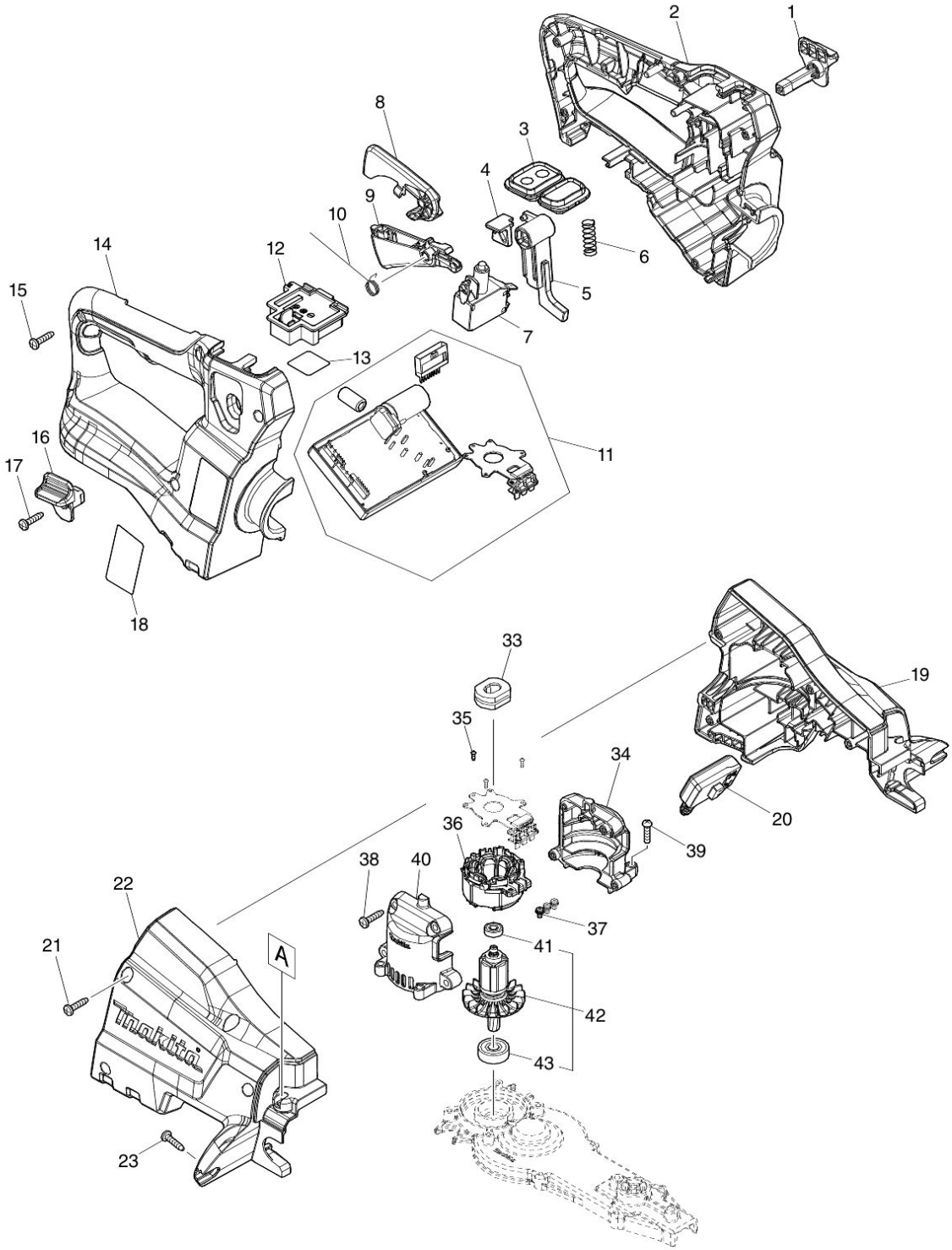

2018/01
DUH751 1/2

Partdrawing for DUH751Z - Messenset

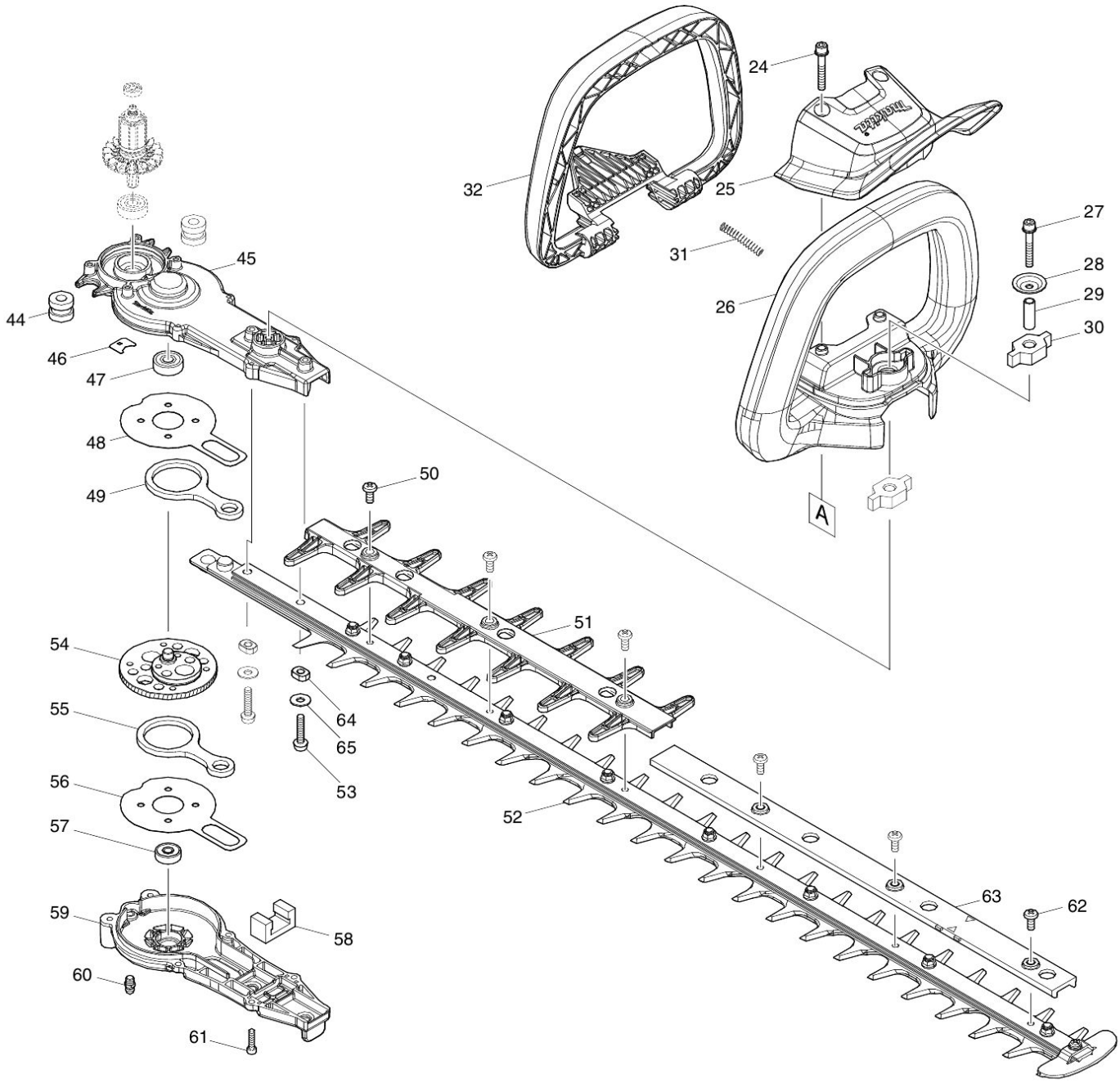

2018/01
DUH751 2/2