# Partdrawing for EH7500S - Pagina 1

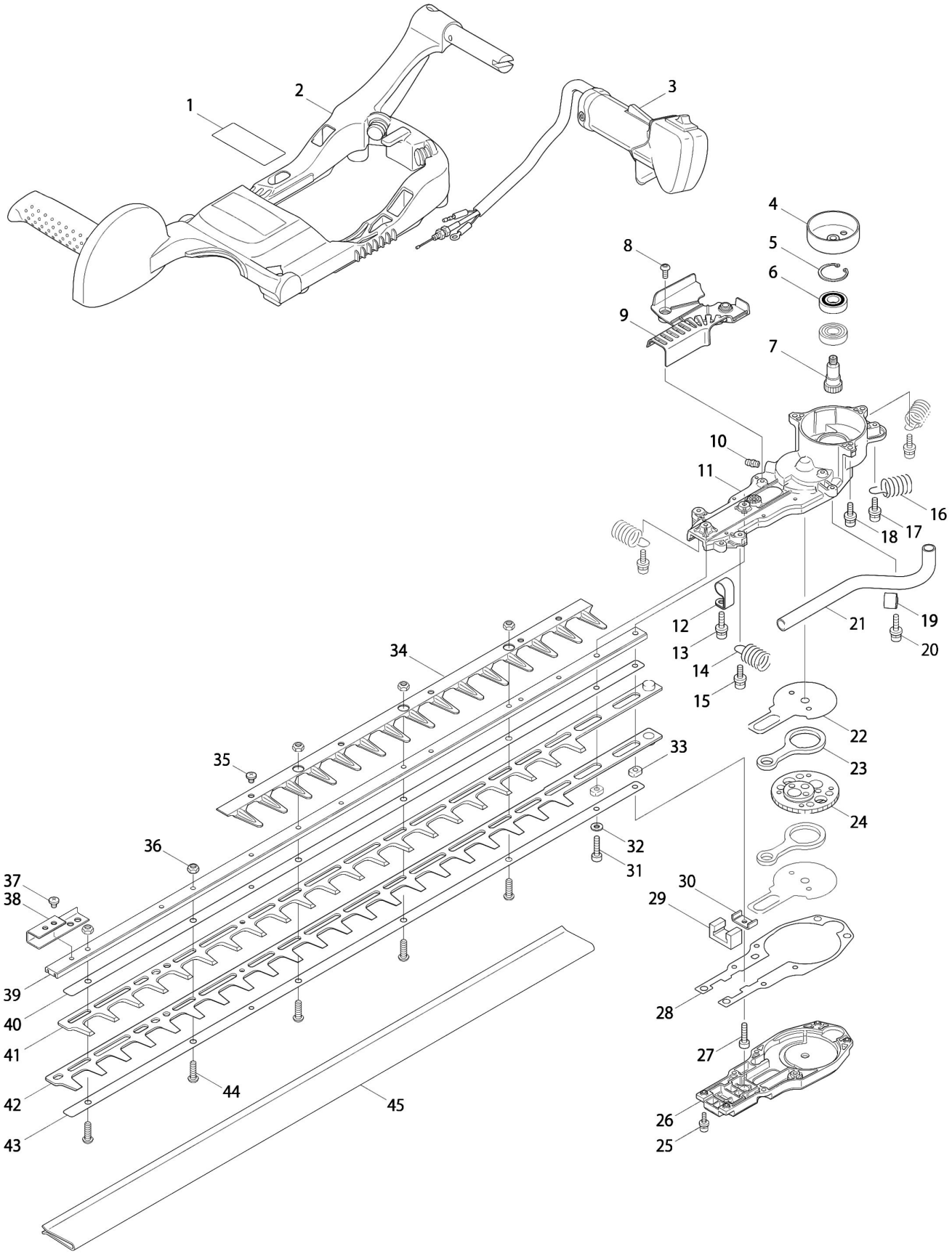

# Partdrawing for EH7500S - Pagina 2

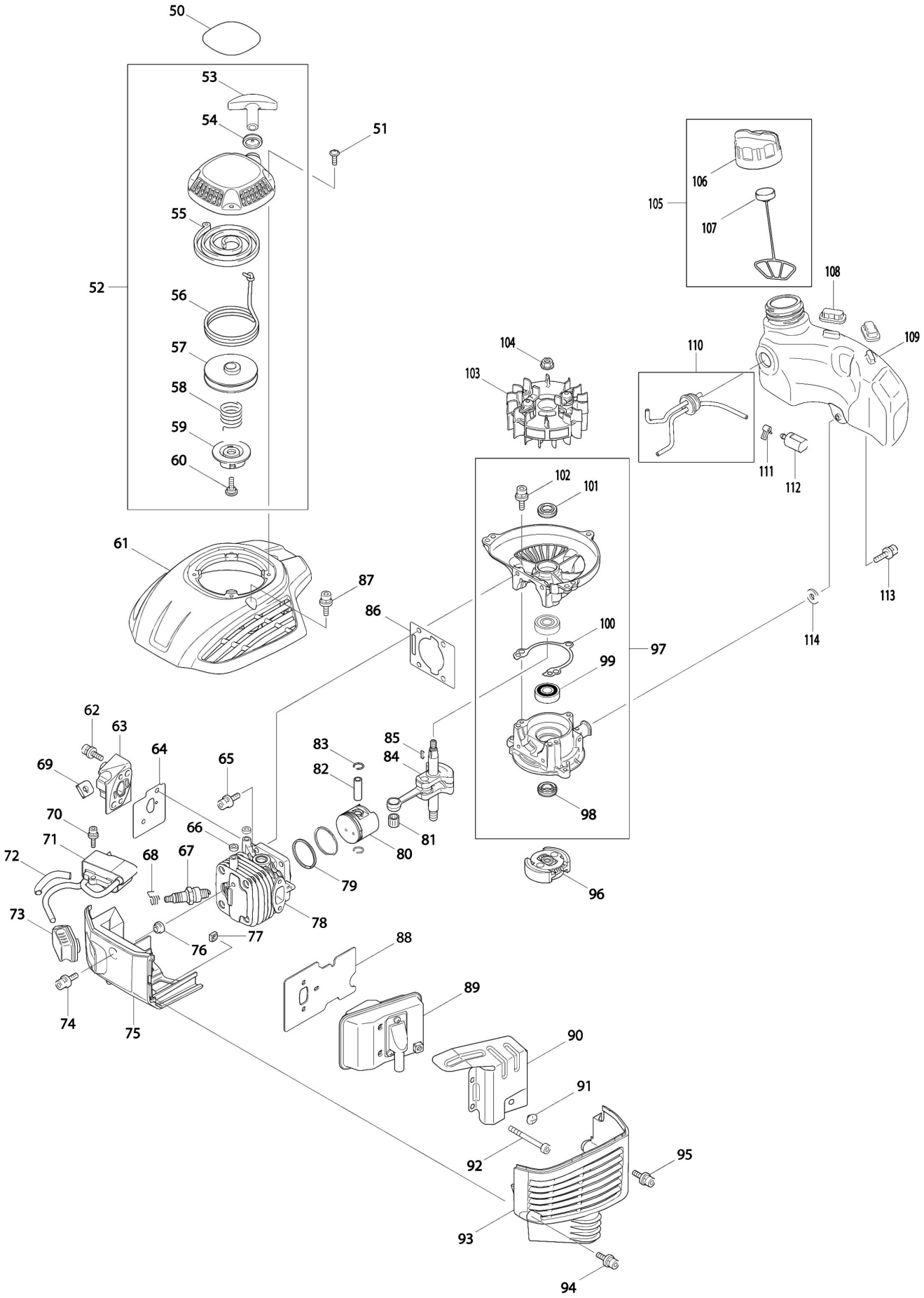

# Partdrawing for EH7500S - Pagina 3

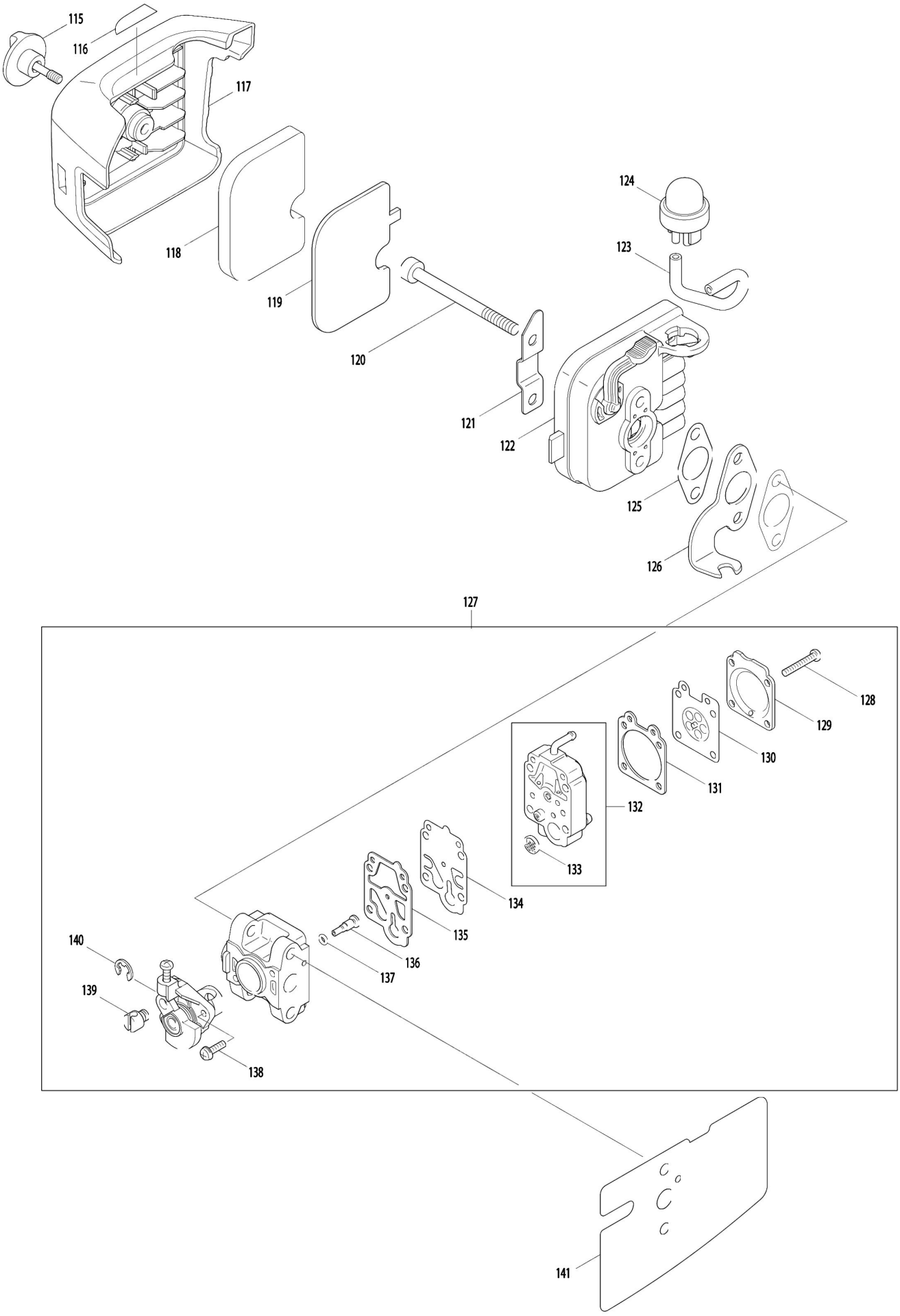
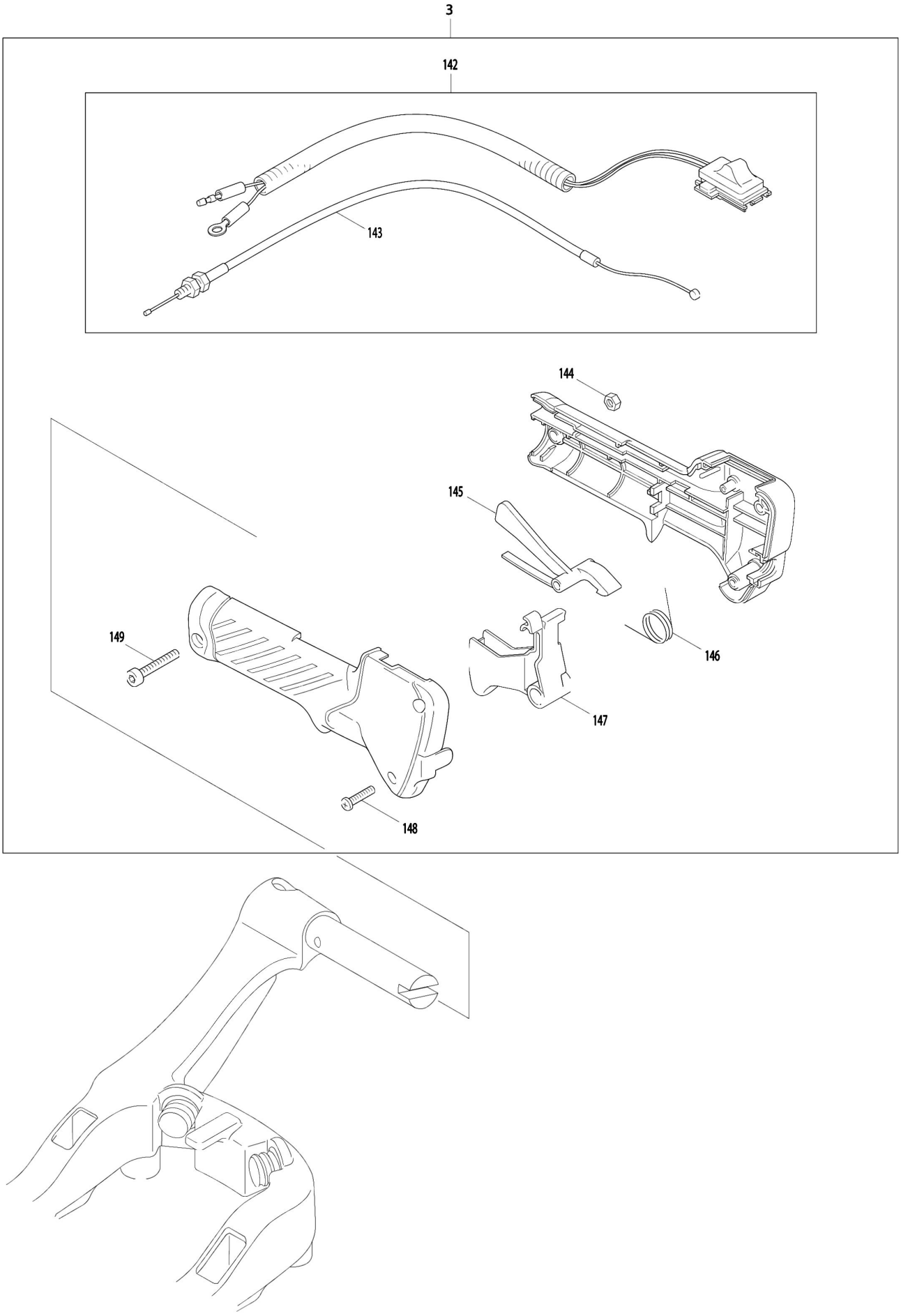
# Partdrawing for EH7500S - Pagina 4