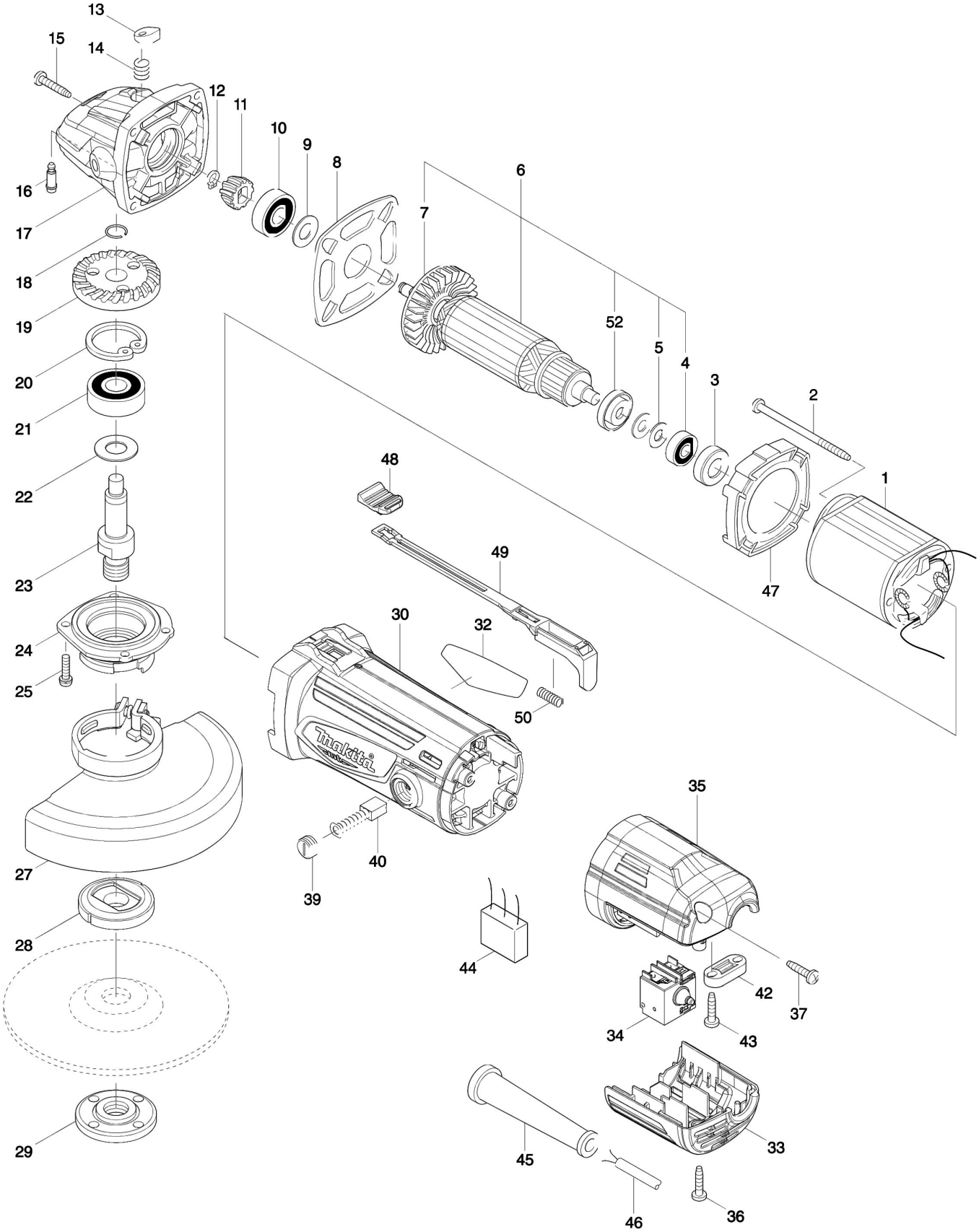Partdrawing for M9503RK - Pagina 1