Partdrawing for DLM382PT2 - Duwboom

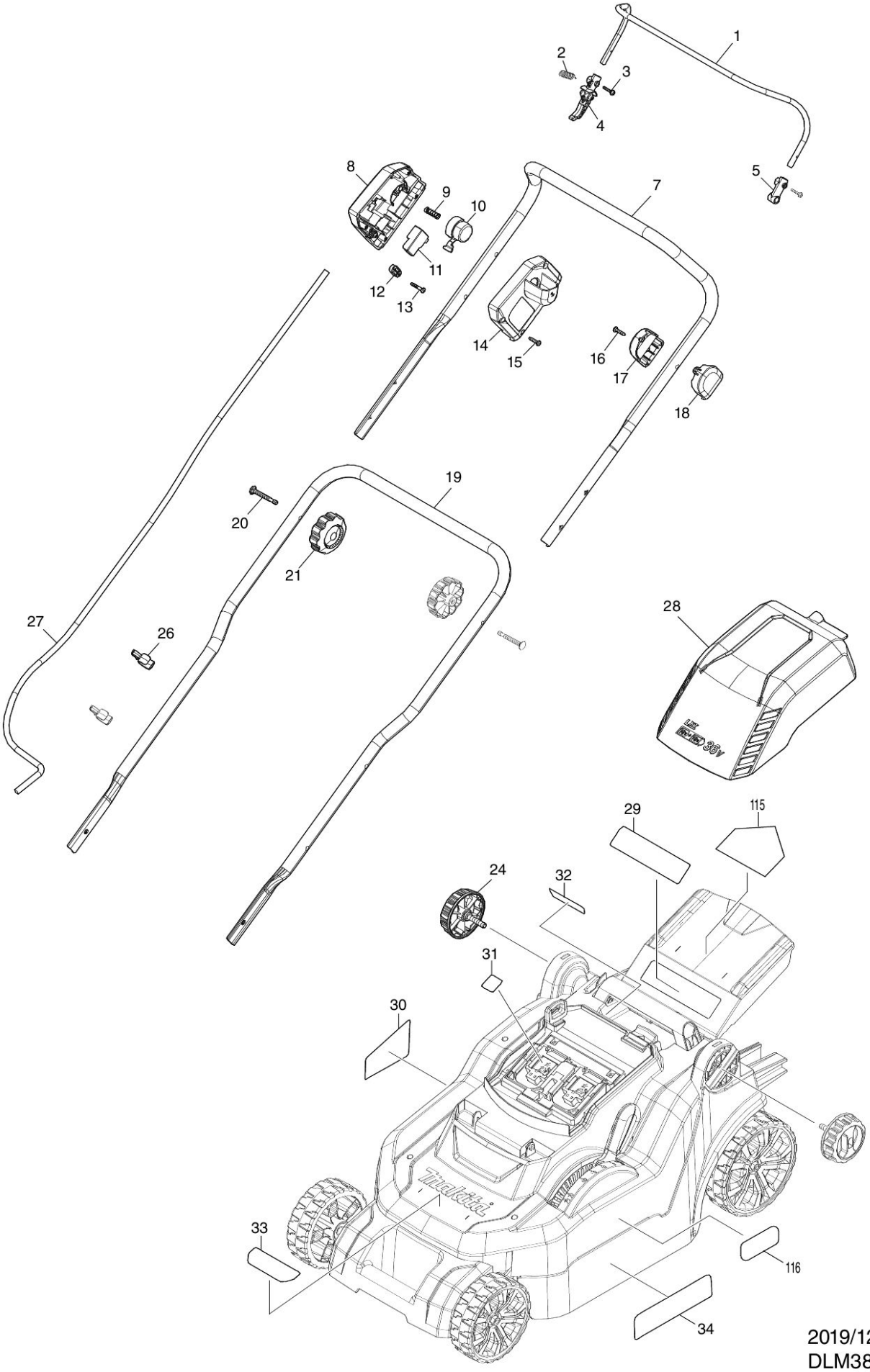

2019/12
DLM382 1/4

Partdrawing for DLM382PT2 - Grasvangzak

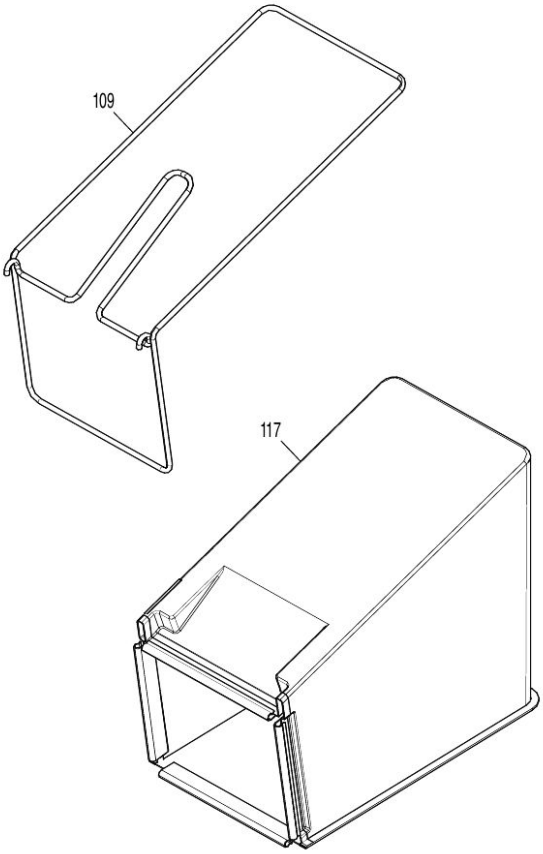

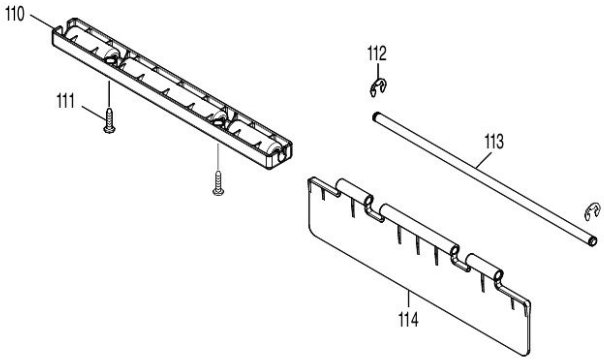

2019/12
DLM382 4/4

Partdrawing for DLM382PT2 - Hoogteverstelling

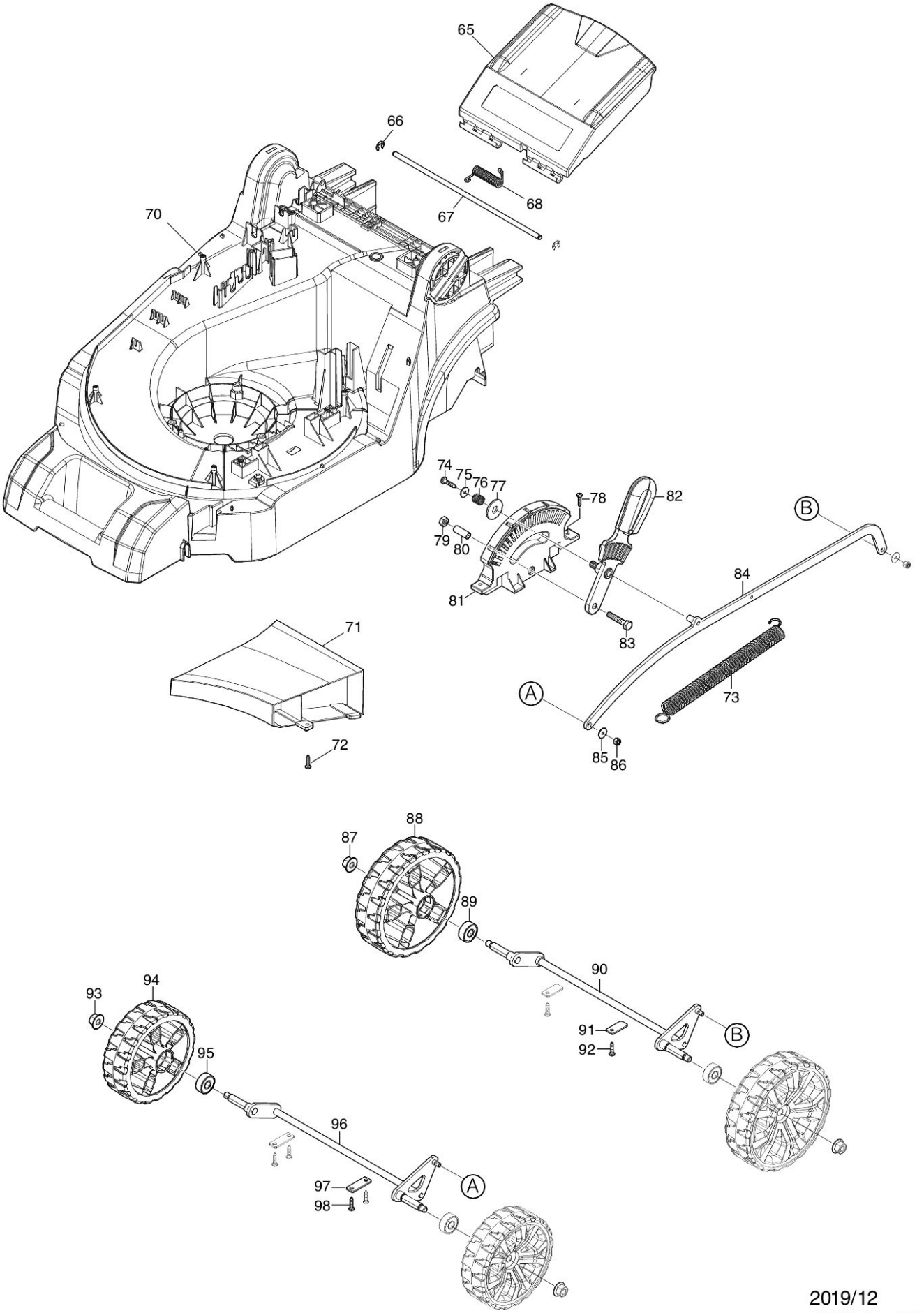

2019/12
DLM382 3/4

Partdrawing for DLM382PT2 - Maaidek

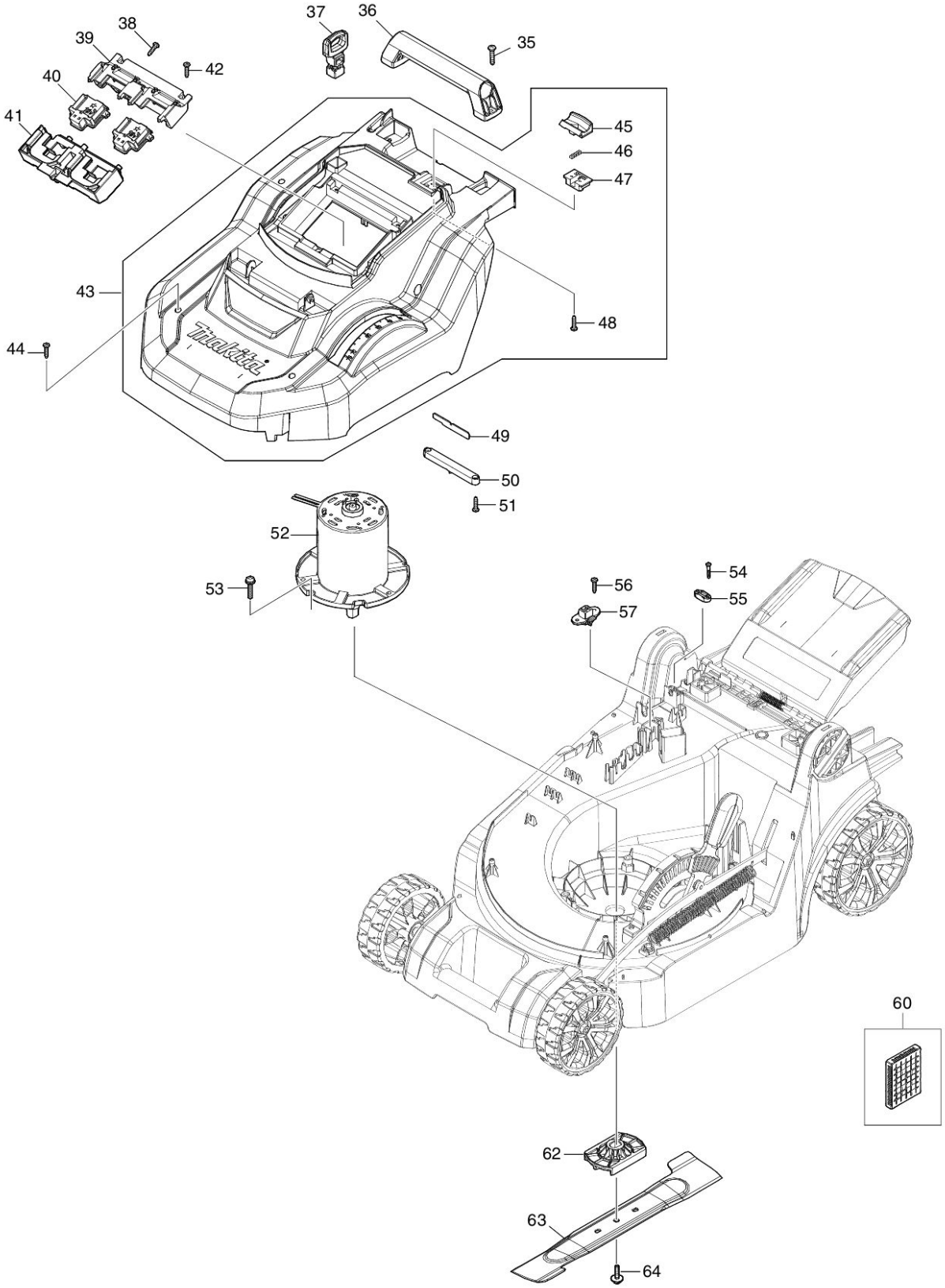

2019/12
DLM382 2/4